Dimensioni ***Dimensions***

CM 110 U

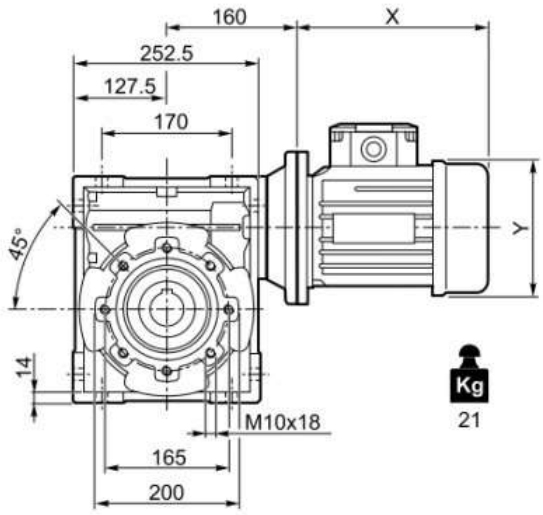

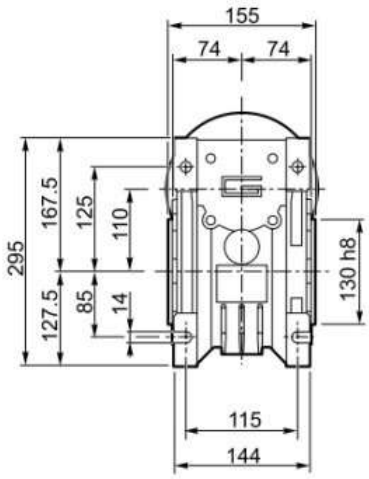

CM 110 F

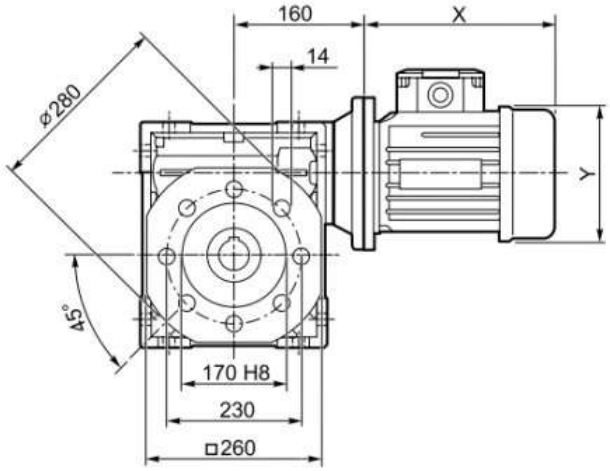

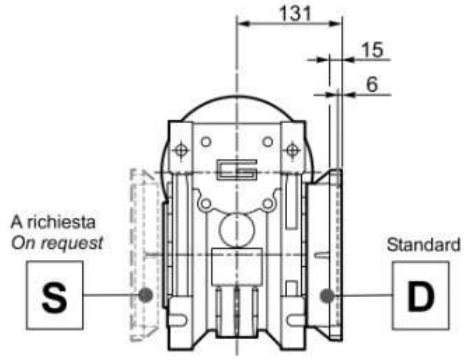

CMIS 110 ..

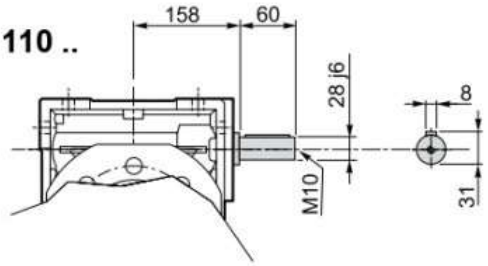

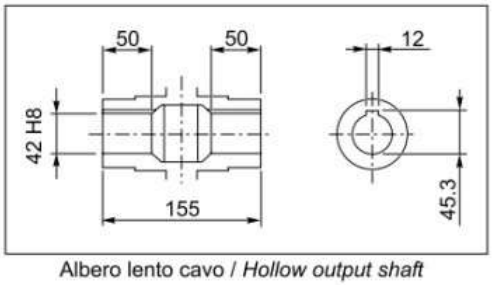

Albero lento cavo / *Hollow output shaft*

CMP ..

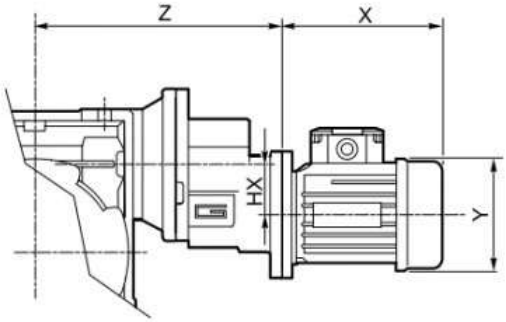

	HX	Z	Kg
080/110	41	260	23.8
090/110	36.5	314	24.5