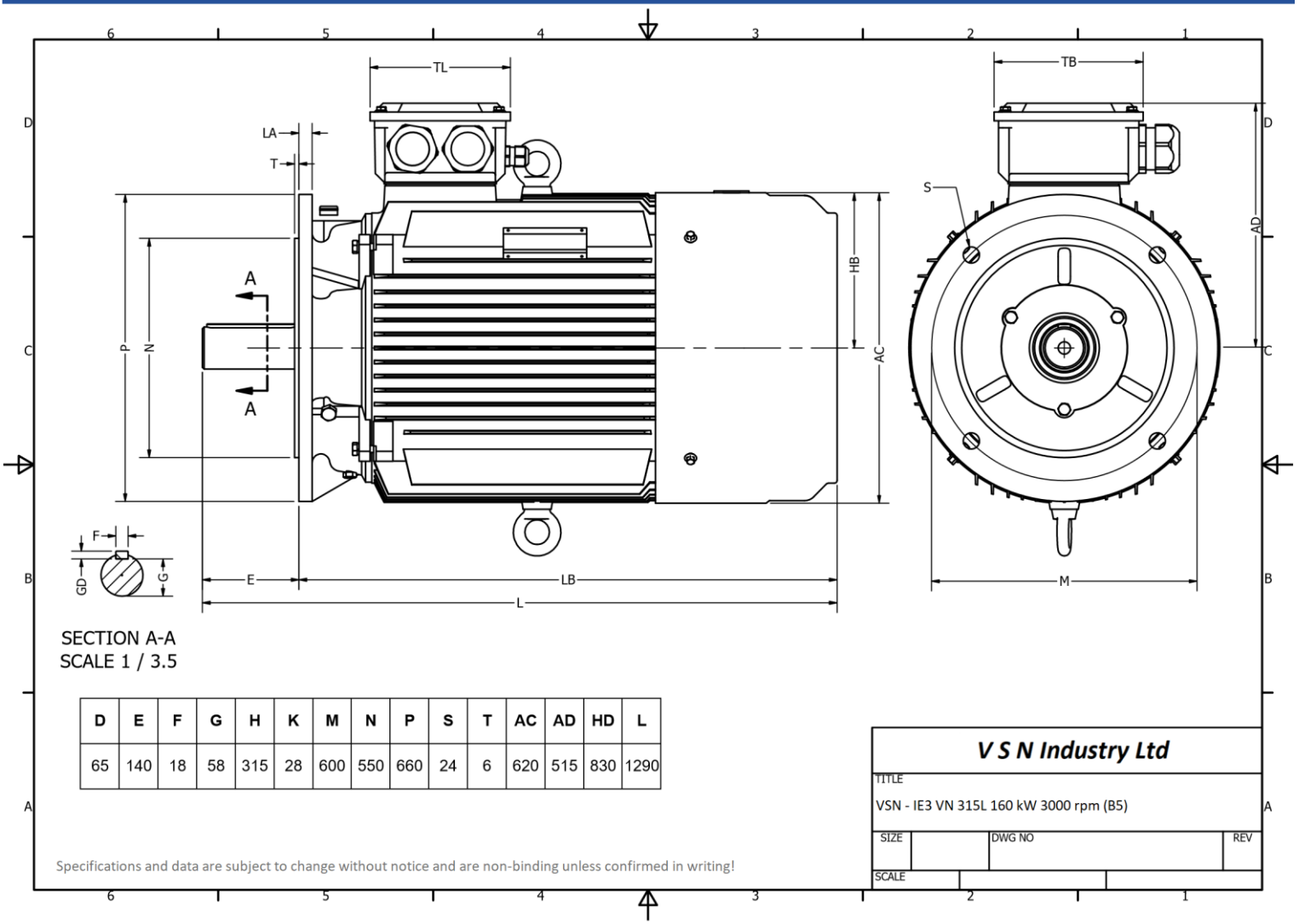

D	E	F	G	H	K	M	N	P	S	T	AC	AD	HD	L
65	140	18	58	315	28	600	550	660	24	6	620	515	830	1290

Standards	IEC 60034	**Efficiency class**	IE3
Manufacturer	V S N Industry Ltd	**Load**	100%
Brand	V S N Drive Systems	**Efficiency**	95.6%
Motor type	IE3 VN - 315L1 - 2	**Power factor**	0.91
Rated power	160 kW	**Sound pressure level (1m)**	92 db(A)
Rated speed	2985 rpm	**Resistance R20 (open)**	
Duty	S1	**Resistance R20 (Delta)**	
Mounting	IM B5		
Voltage	400 V / 690 V	**Full load torque**	511.9 Nm
Frequency	50 Hz	**Starting torque / Rated torque (Tst/Tn)**	1.8
Connection	Delta / Star	**Pull-up torque / Rated torque (Tmin/Tn)**	
Full load current	265.46 A / 153.89 A	**Maximum torque / Rated torque (Tmax/Tn)**	2.3
No-load current			
Degree of protection	IP55		
Insulation class	F (temp. rise B)		
Max. ambient temp	40 °C	**Starting current / Rated current (Ist/In), DOL**	7.2
Max. altitude	1000 m above sea level	**Starting current / Rated current (Ist/In), Y/D**	
Cable entry	M20 x 1.5	**Rotor inertia**	
Frame material	Cast iron	**Bearing DE**	6317
Weight	890 kg	**Bearing NDE**	6317