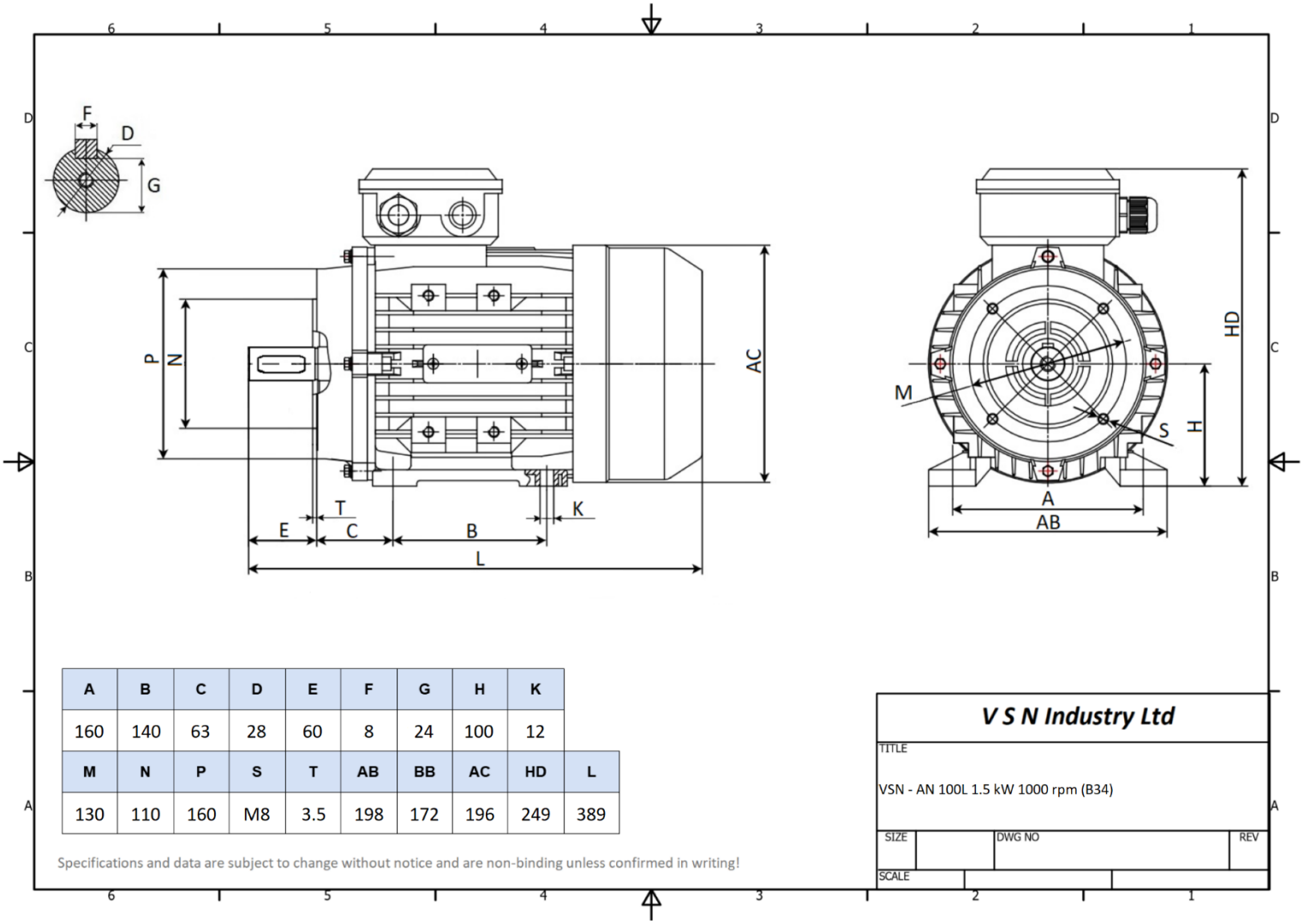

A	B	C	D	E	F	G	H	K
160	140	63	28	60	8	24	100	12

M	N	P	S	T	AB	BB	AC	HD	L
130	110	160	M8	3.5	198	172	196	249	389

Specifications and data are subject to change without notice and are non-binding unless confirmed in writing!

V S N Industry Ltd

TITLE: VSN - AN 100L 1.5 kW 1000 rpm (B34)

SIZE | DWG NO | REV

SCALE

Standards	IEC 60034	**Efficiency class**	IE1
Manufacturer	V S N Industry Ltd	**Load**	100%
Brand	V S N Drive Systems	**Efficiency**	75.2 %
Motor type	AN - 100L1 - 6	**Power factor**	0.75
Rated power	1.5 kW	**Sound pressure level (1m)**	63 db(A)
Rated speed	940 rpm	**Resistance R20 (open)**	
Duty	S3 70%	**Resistance R20 (Delta)**	
Mounting	IM B34		
Voltage	230 V / 400 V	**Full load torque**	15.1 Nm
Frequency	50 Hz	**Starting torque / Rated torque (Tst/Tn)**	2.0
Connection	Delta / Star	**Pull-up torque / Rated torque (Tmin/Tn)**	
Full load current	6.68 A / 3.84 A	**Maximum torque / Rated torque (Tmax/Tn)**	2.1
No-load current			
Degree of protection	IP55		
Insulation class	F (temp. rise B)		
Max. ambient temp	40 °C	**Starting current / Rated current (Ist/In), DOL**	5.5
Max. altitude	1000 m above sea level	**Starting current / Rated current (Ist/In), Y/D**	
Cable entry	M20 x 1.5	**Rotor inertia**	
Housing material	Aluminium	**Bearing DE**	6206
Weight	23.2 kg	**Bearing NDE**	6206