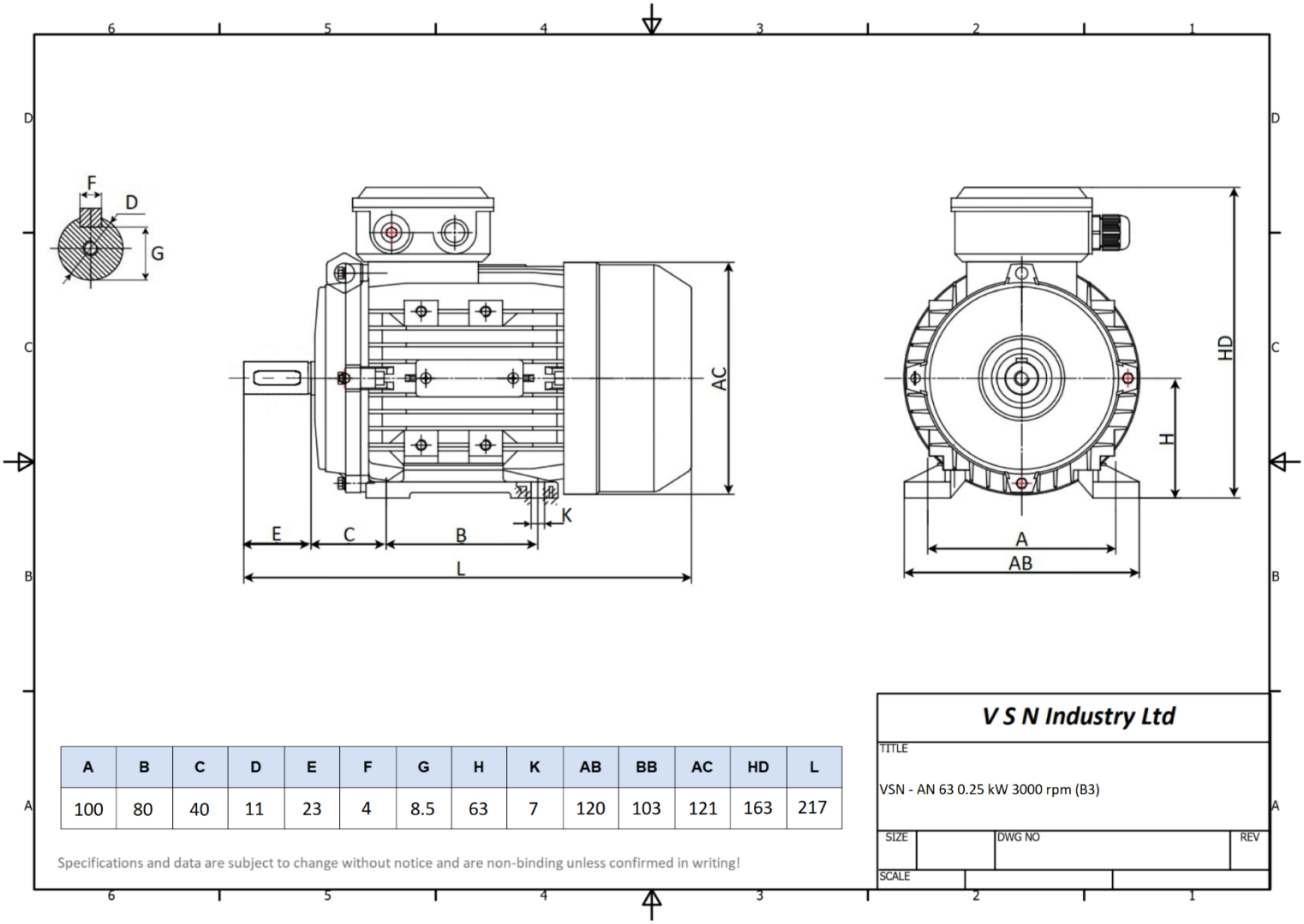

A	B	C	D	E	F	G	H	K	AB	BB	AC	HD	L
100	80	40	11	23	4	8.5	63	7	120	103	121	163	217

Specifications and data are subject to change without notice and are non-binding unless confirmed in writing!

Standards	IEC 60034	**Efficiency class**	IE1
Manufacturer	V S N Industry Ltd	**Load**	100%
Brand	V S N Drive Systems	**Efficiency**	58.2%
Motor type	AN - 63M2 - 2	**Power factor**	0.81
Rated power	0.25 kW	**Sound pressure level (1m)**	63 db(A)
Rated speed	2720 rpm	**Resistance R20 (open)**	
Duty	S3 70%	**Resistance R20 (Delta)**	
Mounting	IM B3		
Voltage	230 V / 400 V	**Full load torque**	1 Nm
Frequency	50 Hz	**Starting torque / Rated torque (Tst/Tn)**	2.0
Connection	Delta / Star	**Pull-up torque / Rated torque (Tmin/Tn)**	
Full load current	1.33 A / 0.77 A	**Maximum torque / Rated torque (Tmax/Tn)**	2.2
No-load current			
Degree of protection	IP55		
Insulation class	F (temp. rise B)		
Max. ambient temp	40 °C	**Starting current / Rated current (Ist/In), DOL**	5.5
Max. altitude	1000 m above sea level	**Starting current / Rated current (Ist/In), Y/D**	
Cable entry	M16 x 1.5	**Rotor inertia**	
Housing material	Aluminium	**Bearing DE**	6201
Weight	5.5 kg	**Bearing NDE**	6201