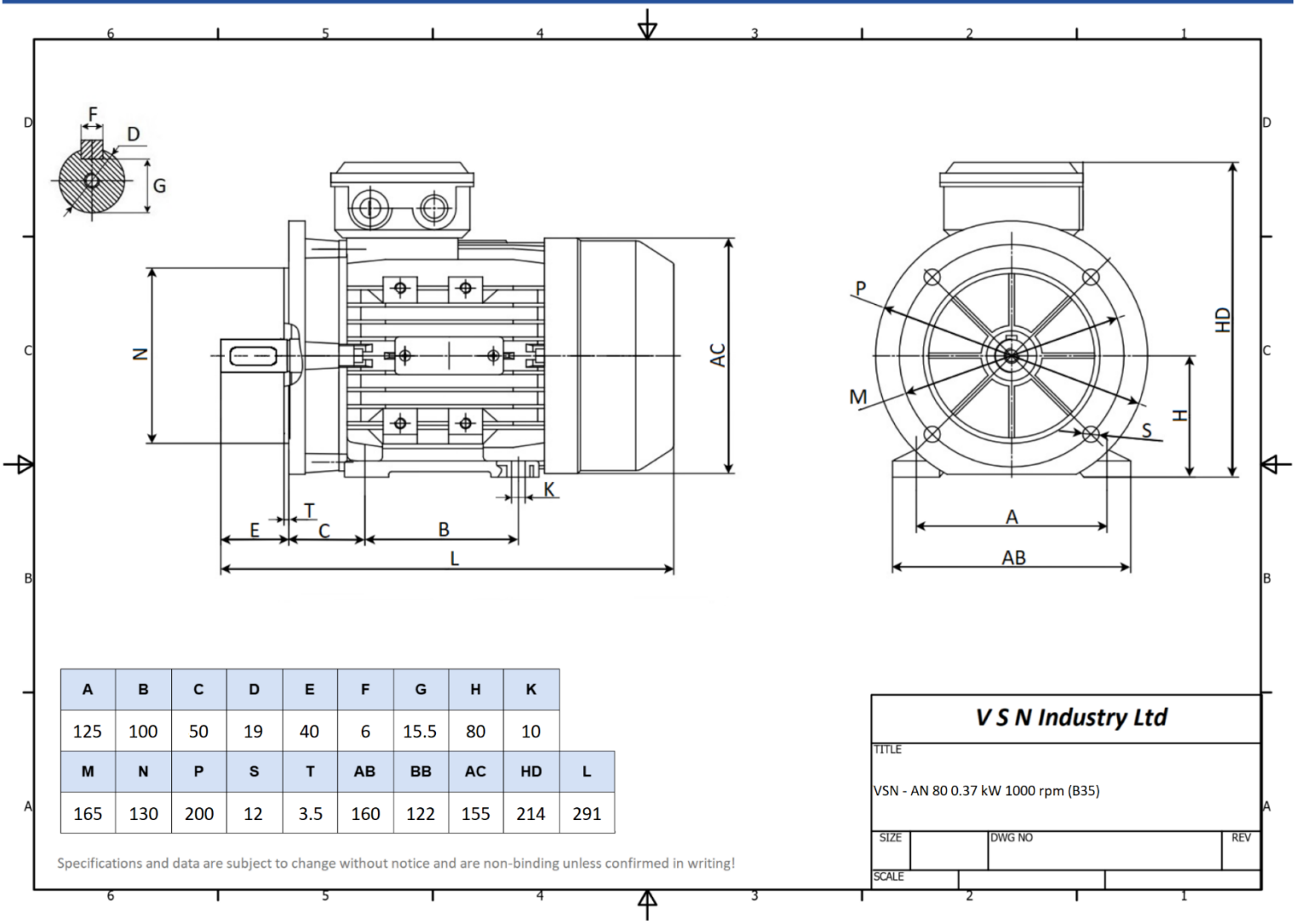

A	B	C	D	E	F	G	H	K
125	100	50	19	40	6	15.5	80	10

M	N	P	S	T	AB	BB	AC	HD	L
165	130	200	12	3.5	160	122	155	214	291

Standards	IEC 60034	**Efficiency class**	IE1
Manufacturer	V S N Industry Ltd	**Load**	100%
Brand	V S N Drive Systems	**Efficiency**	59.7 %
Motor type	AN - 80M1 - 6	**Power factor**	0.7
Rated power	0.37 kW	**Sound pressure level (1m)**	56 db(A)
Rated speed	930 rpm	**Resistance R20 (open)**	
Duty	S3 70%	**Resistance R20 (Delta)**	
Mounting	IM B35		
Voltage	230 V / 400 V	**Full load torque**	4 Nm
Frequency	50 Hz	**Starting torque / Rated torque (Tst/Tn)**	1.9
Connection	Delta / Star	**Pull-up torque / Rated torque (Tmin/Tn)**	
Full load current	2.22 A / 1.28 A	**Maximum torque / Rated torque (Tmax/Tn)**	2.0
No-load current			
Degree of protection	IP55		
Insulation class	F (temp. rise B)		
Max. ambient temp	40 °C	**Starting current / Rated current (Ist/In), DOL**	5.0
Max. altitude	1000 m above sea level	**Starting current / Rated current (Ist/In), Y/D**	
Cable entry	M20 x 1.5	**Rotor inertia**	
Housing material	Aluminium	**Bearing DE**	6204
Weight	9.8 kg	**Bearing NDE**	6204