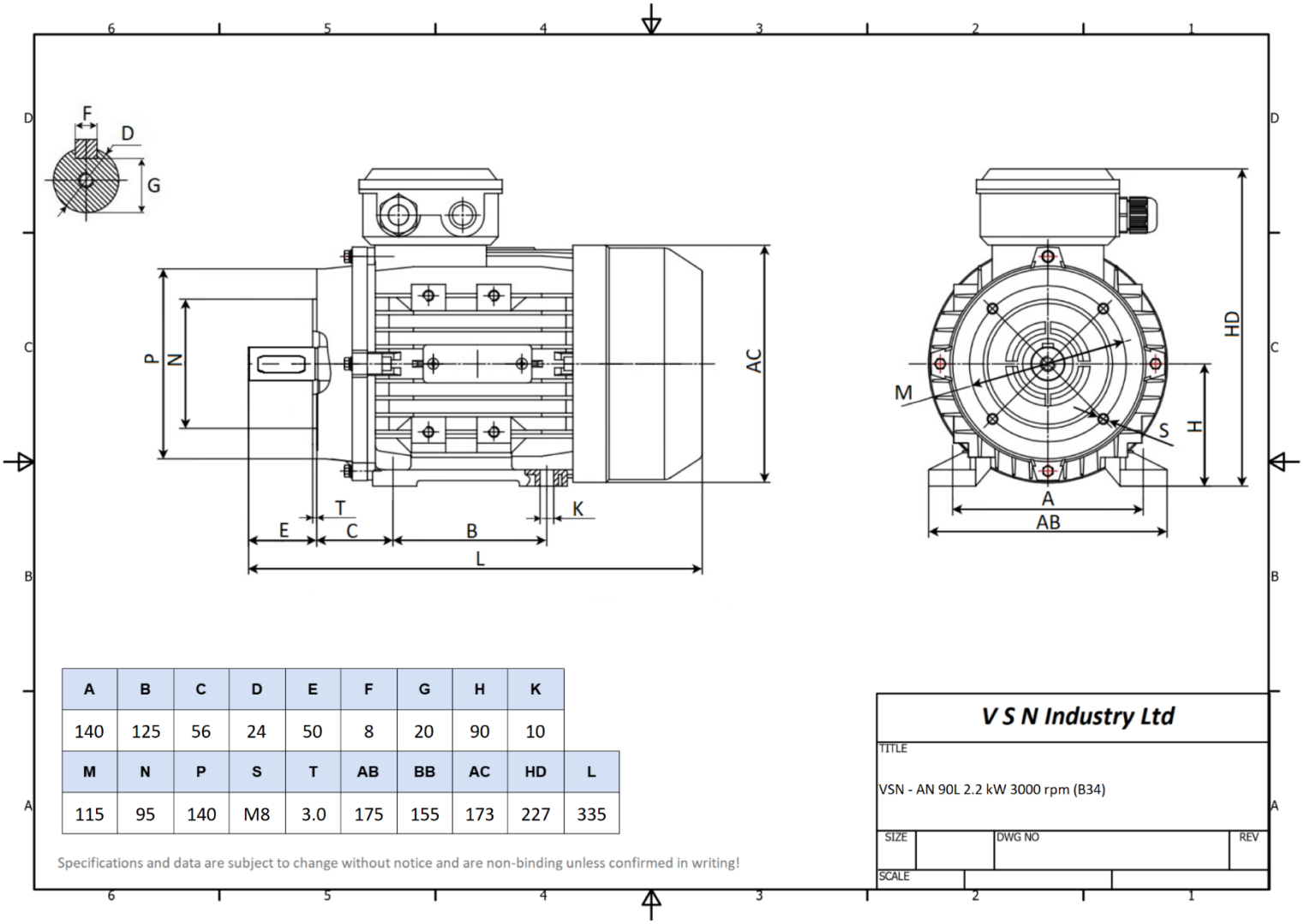

A	B	C	D	E	F	G	H	K
140	125	56	24	50	8	20	90	10

M	N	P	S	T	AB	BB	AC	HD	L
115	95	140	M8	3.0	175	155	173	227	335

Standards	IEC 60034	**Efficiency class**	IE1
Manufacturer	V S N Industry Ltd	**Load**	100%
Brand	V S N Drive Systems	**Efficiency**	79.7%
Motor type	AN - 90L1 - 2	**Power factor**	0.85
Rated power	2.2 kW	**Sound pressure level (1m)**	74 db(A)
Rated speed	2810 rpm	**Resistance R20 (open)**	
Duty	S3 70%	**Resistance R20 (Delta)**	
Mounting	IM B34		
Voltage	230 V / 400 V	**Full load torque**	7.5 Nm
Frequency	50 Hz	**Starting torque / Rated torque (Tst/Tn)**	2.0
Connection	Delta / Star	**Pull-up torque / Rated torque (Tmin/Tn)**	
Full load current	8.15 A / 4.69 A	**Maximum torque / Rated torque (Tmax/Tn)**	2.2
No-load current			
Degree of protection	IP55		
Insulation class	F (temp. rise B)		
Max. ambient temp	40 °C	**Starting current / Rated current (Ist/In), DOL**	7
Max. altitude	1000 m above sea level	**Starting current / Rated current (Ist/In), Y/D**	
Cable entry	M20 x 1.5	**Rotor inertia**	
Housing material	Aluminium	**Bearing DE**	6205
Weight	16.2 kg	**Bearing NDE**	6205